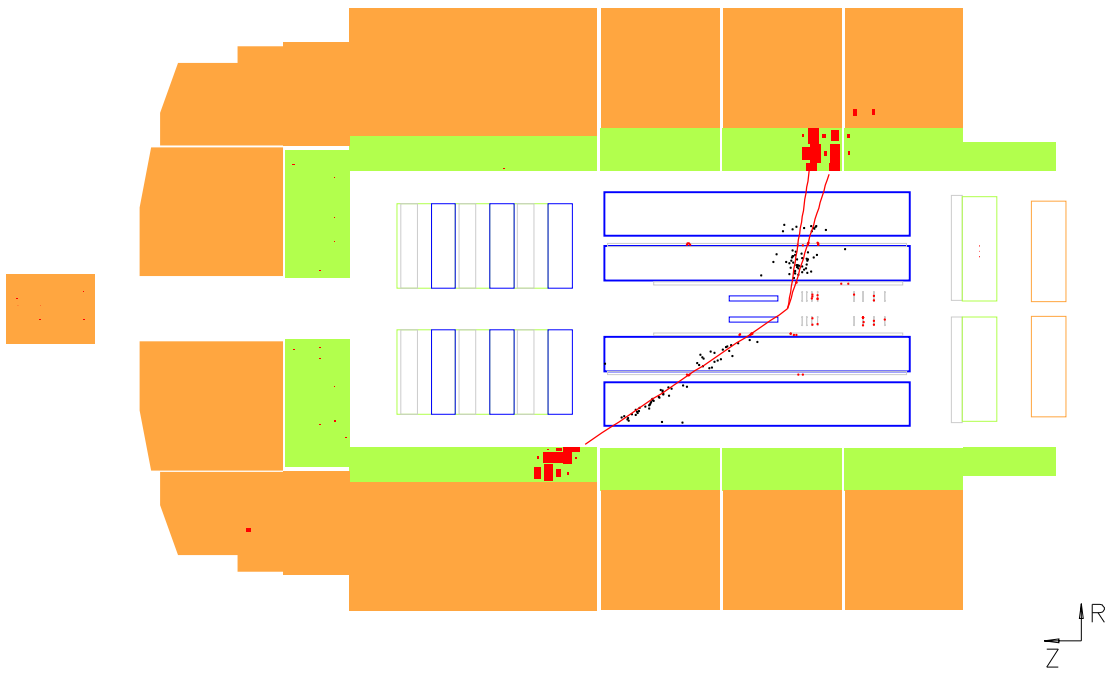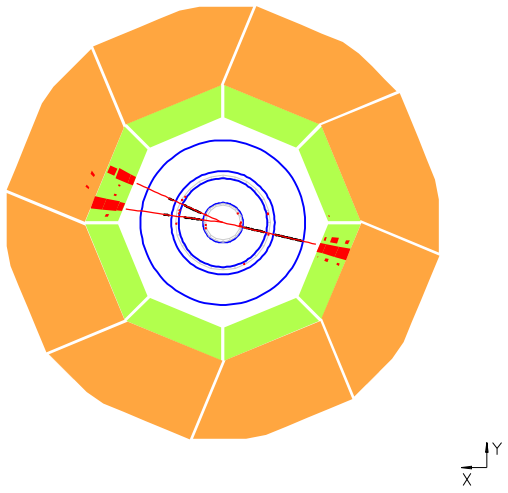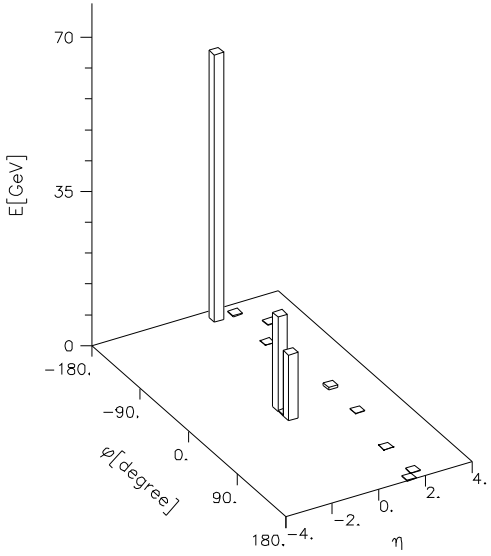Run 241527 Event 44539 Class: 4 5 7 8 11 16 19 25 26 27 28 29 run date 25/4/99